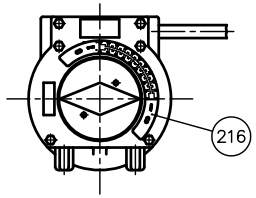

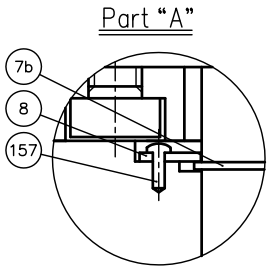

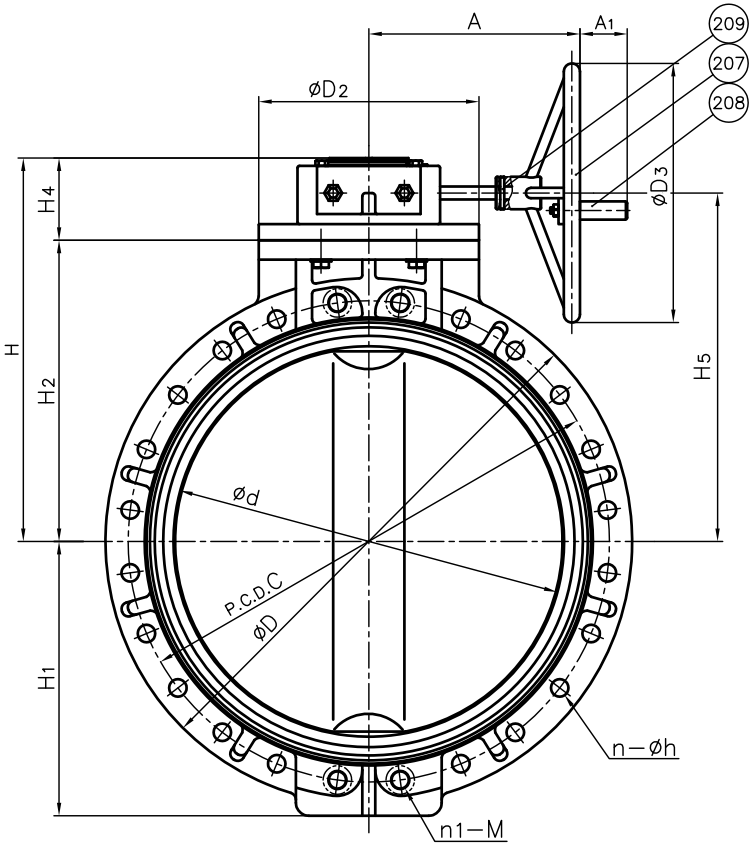

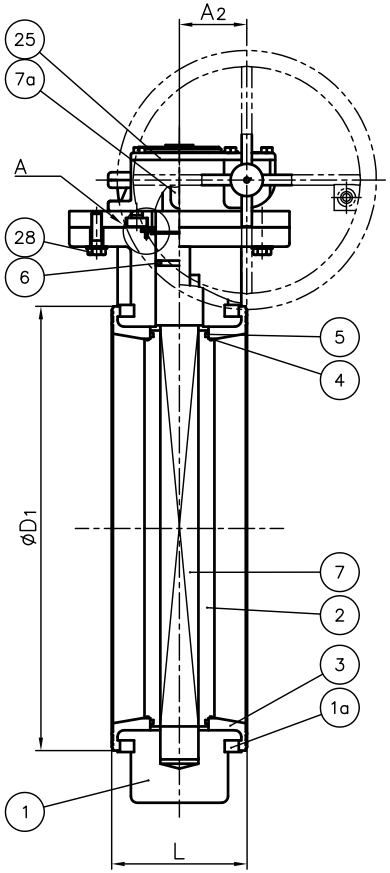

Detail of Inserted Nuts

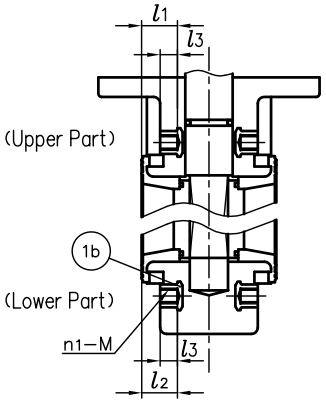

Nominal Size		M	n	Q'TY OF INSERTED METAL UPPER	LOWER	TOTAL (2×n1)	l1	l2	l3
450mm	18"	M24	16	2×2	2×2	8	49	54	24
500	20	M24	16	2×2	2×2	8	49	59	24
600	24	M30	20	2×2	2×2	8	64	64	30

No.	DESCRIPTION	QTY.	MATERIAL	REMARKS
1b	INSERTED METAL OF BODY	8	COPPER ALLOY (C3604)	
1a	RING	2	CHROMIZED STEEL (SS400) with Epoxy Powder Coat.	
216	SCALE PLATE	1	STAINLESS STEEL (SUS304)	
209	SPRING PIN	1	STAINLESS STEEL (SUS304)	
208	HANDLE GRIP	1	NYLON etc.	
207	HANDLE (C)	1	CAST IRON (FC250)	Polyurethane Coat.
157	SCREW (F)	4	STAINLESS STEEL (SUS304)	
28	BOLT (C)	4	STAINLESS STEEL (SUS304)	
25	GEAR BOX	1	CAST IRON (FC250) etc.	Polyurethane Coat. (Rotork)
8	STEM HOLDER (A)	1	PP	
7b	SNAPRING	1	STAINLESS STEEL (SUS304)	
7a	KEY (A)	1	CORBON STEEL (S45C)	
7	STEM	1	□STAINLESS STEEL (SUS403) □STAINLESS STEEL (SUS316)	
6	O−RING (C)	1	□EPDM □FKM □Others ( )	
5	O−RING (B)	2		
4	O−RING (A)	2		
3	SEAT	1		
2	DISC	1	BODY/DISC □PP/PP □PVDF/PVDF	
1	BODY	1		

DIMENSIONS TABLE

Unit : mm

Nominal Size		d	JIS 10K C	n	h	n1	M	D PP	PVDF	D1	D2	D3	L	H	H1	H2	H4	H5	A	A1	A2	Number of handle rotation	GEAR BOX TYPE
450mm	18"	452	565	16	27	4	M24	633	630	525	340	400	179	497	315	370	127	443	326	75.5	104.5	13.75	AB1250N
500	20	502	620	16	27	4	M24	683	680	575	340	400	190	527	350	400	127	473	326	75.5	104.5	13.75	
600	24	603	730	20	33	4	M30	793	790	686	340	400	209	592	424	465	127	538	326	75.5	104.5	13.75	

Note. The shape and appearance of assembly differ a little with nominal size compared to this drawing.

ITEM	BUTTERFLY VALVE (TYPE75) ASS'Y SIDE GEAR TYPE : JIS 10K 450mm (18") ~600mm (24")		
DRAWN	E.Ozaki	DATE	SCALE
CHECKED	H.Kawano	JAN.24.2018	~
APPROVED	H.Kourogi	DRAWING No. BF−M1010JE	2
SPECIAL ORDER No.	ASAHI YUKIZAI CORPORATION		