DIMENSIONS TABLE

UNIT : mm

NOMINAL SIZE		d	DIN PN10 D	C	n	h	D2	D3	E	L	t	l (LIFT)	H	H1	A3	S	S1	S2	P
15mm	½"	16	95	65	4	14	54×66	91	94	130	12	8	145	19.5	55	25	7	13	¼
20	¾	20	100	75	4	14	60×74	91	94	150	13	8	153	17.5	55	25	7	13	¼
25	1	25	125	85	4	14	67×80	100	102	160	13	10	161	18.5	60	25	7	13	¼
32	1¼	32	135	100	4	18	67×80	100	102	180	16	10	165	22.5	60	25	7	13	¼

NOTE.
1. Operation of permission pressure: 0.4~0.6MPa
2. Double Acting : Valve open : Port (a) Exhaust Port (b) Supply
   Valve shut : Port (a) Supply Port (b) Exhaust
3. The shape and appearance of assembly differ a little with nominal size compared to this drawing.

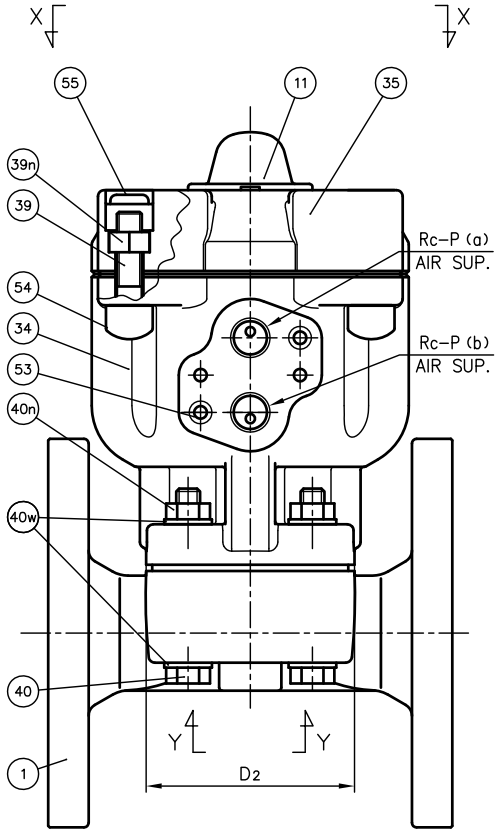

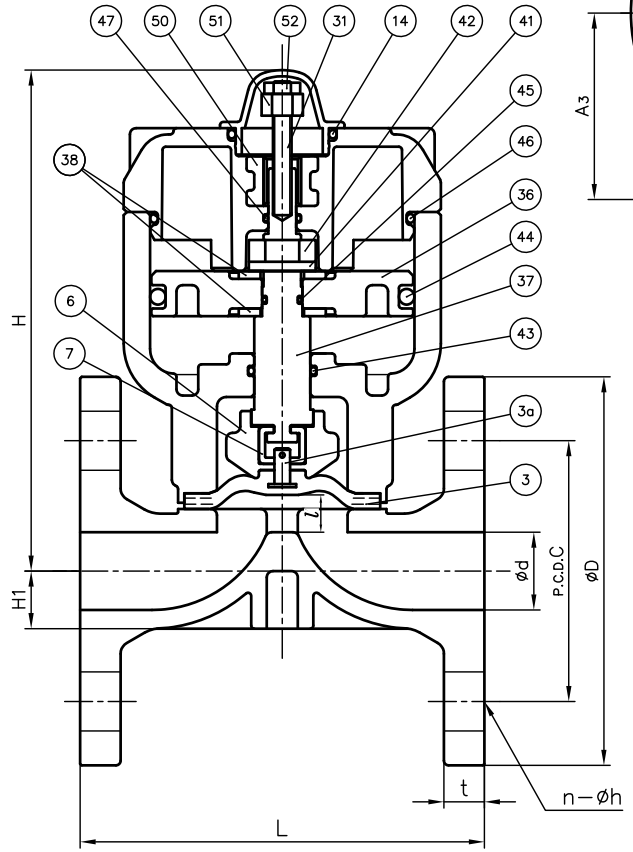

X–X

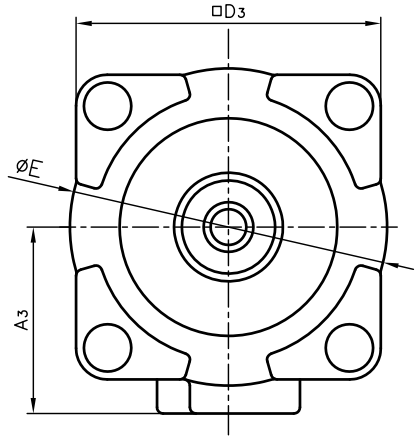

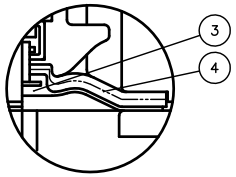

In case material of diaphragm is PTFE

Y–Y

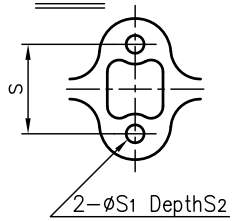

No.	DESCRIPTION	QTY.	MATERIAL	REMARKS
55	CAP	4	EPDM	Blue
54	CAP FOR HEXAGON SOCKET HEAD CAP SCREWS	4	PVC	
53	INSERTED METAL OF CYLINDER BODY	2	STAINLESS STEEL (SUS303)	
52	NUT (No.52)	1	STAINLESS STEEL (SUS304)	
51	STOPPER FOR PNEUMATIC ACTUATOR	1	STAINLESS STEEL (SUS304)	
50	INSERTED METAL OF CYLINDER COVER	1	STAINLESS STEEL (SUS304)	
47	O–RING (No.47)	1	NBR	
46	O–RING (No.46)	1	NBR	
45	O–RING (No.45)	1	NBR	
44	O–RING (No.44)	1	NBR	
43	O–RING (No.43)	1	NBR	
42	NUT (No.42)	1	STAINLESS STEEL (SUS304)	
41	SPRING WASHER	1	STAINLESS STEEL (SUS304)	
40n	NUT (No.40)	4	STAINLESS STEEL (SUS304)	
40w	WASHER (No.40)	8	STAINLESS STEEL (SUS304)	
40	BOLT (No.40)	4	STAINLESS STEEL (SUS304)	
39n	NUT (No.39)	4	STAINLESS STEEL (SUS304)	
39	HEXAGON SOCKET HEAD CAP SCREWS	4	STAINLESS STEEL (SUS304)	
38	WASHER (No.38)	2	STAINLESS STEEL (SUS304)	
37	STEM FOR PNEUMATIC ACTUATOR	1	COPPER ALLOY (C3604)	
36	PISTON	1	PPG	
35	CYLINDER COVER	1	PPG	
34	CYLINDER BODY	1	PPG	
31	INDICATOR ROD	1	STAINLESS STEEL (SUS304)	
14	O–RING (No.14)	1	EPDM	
11	GAUGE COVER	1	PC	
7	JOINT	1	STAINLESS STEEL (SUS304)	
6	COMPRESSOR	1	PVDF	
4	CUSHION	1	EPDM	Used for PTFE Diaphragm
3a	INSERTED METAL OF DIAPHRAGM	1	STAINLESS STEEL (SUS304)	
3	DIAPHRAGM	1	□EPDM □PTFE □Others ( )	
1	BODY	1	□PVC □C–PVC □PP □PVDF	

DIAPHRAGM VALVE PNEUMATIC ACTUATED MODEL TYPE AI ASS'Y
DOUBLE ACTING
DIN PN10: FLANGED END
15mm (½") ~ 32mm (1¼")

DRAWN	E.Emmei	DATE	SCALE
CHECKED	H.Kawano	DEC.19.2018	~
		DRAWING No.	
APPROVED	K.Koushou	D1–AA086DE	6
SPECIAL ORDER No.		ASAHI YUKIZAI CORPORATION	