SOCKET END

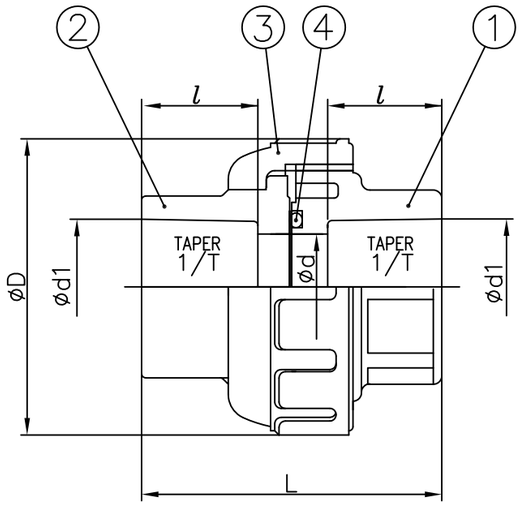

THREADED END

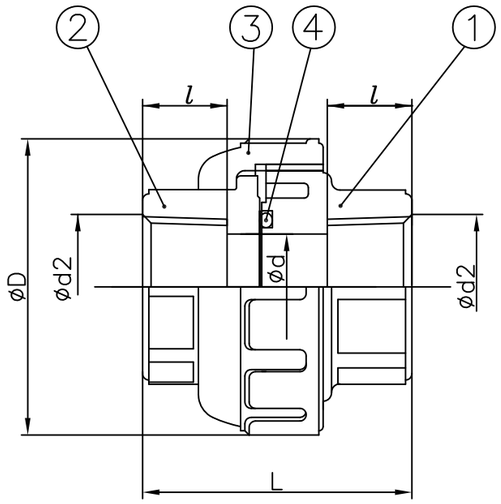

DIMENSIONS TABLE

UNIT : mm

NOMINAL SIZE		d	SOCKET END				THREADED END			D
			d_1	l	1/T	L	d_2	l	L	
13mm	3/8"	13	18.13	18	1/30	46	Rc 3/8	15	43	48
16	1/2	15	22.11	20	1/34	46	Rc 1/2	15	43	48
20	3/4	20	26.13	24	1/34	61	Rc 3/4	17	57	60
25	1	25	32.16	27	1/34	70	Rc 1	20	63	70
30	1 1/4	31	38.19	30	1/34	77	Rc 1 1/4	22	71	82
40	1 1/2	40	48.21	37	1/37	95	Rc 1 1/2	25	82	100
50	2	51	60.25	42	1/37	107	Rc 2	28	96	106

NOTE. The shape and appearane of assembly differ a little with nominal size compared to this drawing.

No.	DESCRIPTION	No.REQ'D	MATERIAL	REMARKS
4	O-RING	1	□EPDM □FKM □others ( )	
3	UNION NUT	1	□PVC □C-PVC 1)	1) SOCKET END ONLY
2	END CONNECTOR	1		
1	BODY	1		

PREFAB JOINT (21TYPE) ASS'Y
JIS : □ SOCKET END, □ THREADED END
13mm(3/8") ~50 mm(2")

DRAWN	T.Matsui	DATE SEP.17.2002	SCALE ~
CHECKED	T.Iwamoto	DRAWING No.	
APPROVED	Y.Kuroki	PJ-60003JE	1
SPECIAL ORDER No.		ASAHI YUKIZAI CORPORATION	